SM 800 - series

- SM 7.5 - 80
- SM 18 - 50
- SM 70 - AR - 24
- SM 400 - AR - 4

Schulz Electronic
Professional Power Supplies

Schulz-Electronic GmbH

Dr.-Rudolf-Eberle-Straße 2
D-76534 Baden-Baden

Fon + 49.7223.9636.0
Fax + 49.7223.9636.90

vertrieb@schulz-electronic.de
www.schulz-electronic.de

Safety Instructions

Caution

The following safety precautions must be observed during all phases of operation, service and repair of this equipment. Failure to comply with the safety precautions or warnings in this document violates safety standards of design, manufacture and intended use of this equipment and may impair the built-in protections within. Delta Elektronika shall not be liable for user's failure to comply with these requirements.

Installation Category

The Delta Elektronika power supplies have been evaluated to installation category II (Over voltage category II).

Grounding of Mains Input

This product is a safety Class 1 instrument. To minimize shock hazard, the instrument chassis must be connected to the AC Power Supply mains through a three or four conductor power cable for resp. a single or three phase unit, with the ground wire firmly connected to an electrical ground (safety ground) at the power outlet.

For instruments designed to be hard-wired to supply mains, the protective earth terminal must be connected to the safety electrical ground before another connection is made. Any interruption of the protective ground conductor, or disconnection of the protective earth terminal will cause a potential shock hazard that might cause personal injury.

Grounding of Power Output

If the output of a unit is specified to deliver max 60Vdc, and either the negative or positive power output is grounded, the voltage on the following connections can be considered safe:

- power outputs and sense connections
- programming/monitor/status-signals, Interlock, Master/Slave-connections, ACF/DCF-relay
- all Delta Elektronika interfaces.

Warning:
When the positive power output can exceed 60Vdc in respect to the negative output, additional external measures must be taken to ensure safety isolation of the following:

- power outputs and sense connections.

Warning:
When the negative power output of the unit can exceed 60Vdc / 42.4Vpk in respect to ground, additional external measures must be taken to ensure safety isolation of the following:

- power outputs and sense connections
- programming/monitor/status-signals, Interlock, Master/Slave-connections, ACF/DCF-relay
- interfaces with operational isolation
- non-isolated interfaces.

Caution 1: If a low voltage unit has both power outputs floating, or if the output is in series with an external high AC or DC voltage, the negative power output can exceed the safe value in respect to ground as specified in the above warning!

Caution 2: Although a high voltage unit is set to a safe voltage below 60V, for safety it must always be considered as high voltage unit! Wrong operation, a programming error or an external defect can result in an unsafe high output voltage.

Caution 3: When programming a high voltage unit directly via a PC or via a network connection, either ground the negative power output or use a safety isolated interface!

For more information and schematics regards Grounding and Safety, see the special application note *"Safe operation of a power supply"* on the Delta Elektronika website.

Fuses

Fuses must be changed by authorized Delta Elektronika service personnel only, for continued protection against risk of fire.

Input Ratings

Do not use an AC Supply which exceeds the input voltage and frequency rating of this instrument. The input voltage and frequency rating of the Delta Elektronika power supply series are stated in de accompanying datasheet.

Live Circuits

Operating personnel must not remove the instrument cover. No internal adjustment or component replacement is allowed by non Delta Elektronika qualified personnel. Never replace components with the power cable connected. To avoid injuries, always disconnect power, discharge circuits and remove external voltage sources before touching components.

Parts Substitutions & Modifications

Parts substitutions and modifications are allowed by authorized Delta Elektronika service personnel only. For repairs or modifications the unit must be returned to a Delta Elektronika service facility.

Removal of (safety) covers

Safety cover(s) are used to cover potentially hazardous voltages.
Observe the following when removing safety cover(s):
- Switch off the unit.
- Disconnect the unit from the mains supply.
- Wait for 3 minutes to allow internal capacitors to discharge.
- Unscrew the screws and remove the cover(s).
- Always place the cover(s) back before connecting the unit to the mains supply again.

Environmental Conditions

The Delta Elektronika power supplies safety approval applies to the following operating conditions:

Indoor use
Ambient temperature : –20 to 50 °C
Maximum relative humidity : 95%, non condensing, up to 40 °C
: 75%, non condensing, up to 50 °C
Altitude: up to 2000 m
Pollution degree 2

Caution risk of electrical Shock

Instruction manual symbol. The instrument will be marked with this symbol when it is necessary for the user to refer to the instruction manual

Protective ground conductor terminal

O *Off (supply)*

I *On (Supply)*

WEEE

(Waste Electrical & Electronic Equipment)

Correct Disposal of this Product

Applicable in the European Union.

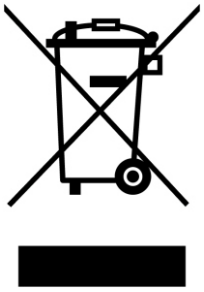

This marking shown on the product, its packing or its literature indicates that it should not be disposed with other wastes at the end of its working life, but should be collected separately to recycle it responsibly to promote the sustainable reuse of material resources.

DESCRIPTIONS

1) OUTPUT

The SM7.5-80, SM18-50, SM70-AR-24 and the SM400-AR-4 can either be used as a constant voltage source with current limiting or as a constant current source with voltage limiting. The change of mode occurs sharply at the crossing of the voltage and current settings. fig. 3 - 1 shows the output ranges.

The SM70-AR-24 and the SM400-AR-4 feature an AUTORANGING facility where the power supply automatically switches over between two current ranges. This switching, which is unnoticeable for the user, results in a versatile power supply with **twice the output voltage range**. This means that for the SM70-AR-24 the maximum output power of 840 W is available at both 35 V and 70 V. For the SM400-AR-4 this is 800 W at both 200 V and 400 V.

◦ DISPLAY CV/CC SETTINGS FUNCTION

The settings of the voltage and current control (also when programmed) can be observed on the front panel meters by pressing the Display CV/CC Settings button. This allows the current limit to be set when operating in the CV mode without shorting the output terminals, and the voltage limit to be set when operating in the CC mode without opening the load leads.

◦ OVERLOAD PROTECTION

The power supply is fully protected against all overload conditions, including short circuit.

2) INPUT VOLTAGE

The power supplies have a wide input voltage range.

◦ At line voltages below about 100-110 V AC the output power has to be derated, see page 1-2, "Input".

3) INPUT CURRENT

The unit has active power factor correction (PFC). The input current will therefore almost be a sine wave. This means that the RMS-value and the harmonic distortion of the input current will be relatively low.

4) STANDBY INPUT POWER

The unit consumes very little power when in standby. This makes it possible to leave the input power on when the output is disabled using the "Output On/Off" function (push button on front panel) or the Remote ShutDown input (pin 5 on connector CON E on the rear panel).

5) EFFICIENCY

The efficiency is very high and constant over a wide output current range. High efficiency means low power loss and low heat generation.

6) CV REGULATION

The CV-load regulation should be measured directly on the output terminals because a few cm of cable can have a voltage drop of several mV (at high current!).

7) CC REGULATION

For accurate CC-load regulation, do not use external voltage sensing.
A voltage between S- and minus output will create an error of about 0.04 % per volt.
A voltage between S+ and + is not critical.The CC-stability is also affected by external voltage sensing.

Note: when the unit operates in CC-mode, the **DCF-LED** will be on. When the unit is in CC-mode most of the time, it is possible to disable the LED with DIP switch 3 on SW1 (rear panel).

8) RIPPLE & NOISE

The output ripple is very low with almost no spikes. The ripple voltage has to be measured directly on the output terminals using a probe with very short connections (to avoid pick up of magnetic fields) (see fig. 3 - 2 and fig. 3 - 3). At low temperatures like –20°C the ripple increases. By using high quality electrolytic capacitors the increase is relatively low.

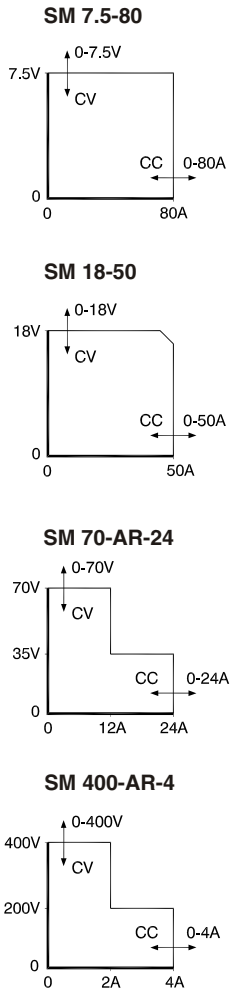

fig. 3 - 1
Output ranges. Every point in the area can be used.

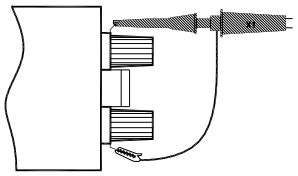

fig. 3 - 2
Measuring ripple voltage WRONG !

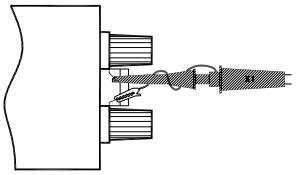

fig. 3 - 3
Measuring ripple voltage RIGHT !

9) ANALOG PROGRAMMING

The output voltage and current can be programmed by an external analog voltage. This programming is very accurate and linear. The levels are all standardized on 5 V.
The inputs have a protection circuit formed by a series resistor and a parallel zener (see fig. 3 - 4). The capacitor limits the speed to a safe value. Note that the analog inputs (and outputs) are **not floating, but the common is connected to the negative output terminal.** Wrong connection of Ø can cause earth loops which can trip the fuse. After removing the fault, the fuse will reset (PTC-fuse). For isolated programming, see next paragraph 10).

10) ISOLATED ANALOG PROGRAMMING

To prevent earth loops which can cause programming errors, use an isolated programming source. If this is not possible, use the optional **ISO AMP CARD (δ-product)** which can be built inside the unit.
With the ISO AMP CARD earth loops between the unit and the programming source are prevented.

11) ETHERNET / IEEE488 / RS232 PROGRAMMING

The Delta Elektronika **PSC-ETH, PSC-488** and the **PSC-232** controllers can be built inside the unit.
Voltage and current can easily be programmed and read back. Also all the status outputs can be read by the computer.

12) MONITORING OUTPUTS

The monitor outputs give a voltage 0 - 5 V proportional to the output current or voltage. The output current can easily be measured using the I-monitor (see fig. 3 - 6). The monitor outputs are buffered with op-amp's and protected with series resistors and parallel zeners (see fig. 3 - 7). The table in fig. 3 - 5 shows the impedance levels of the monitoring outputs.
For using Imon on a pulsating load, see paragraph 20) of this chapter.

13) +12 V ON PROGRAMMING CONNECTOR

The +12 V on the programming connector can be used to supply external circuits. The output is current limited, but should not be overloaded. The fuse F27_3 on pcb P647 could blow. The fuse F27_3 also protects the internal circuit, in case an external high voltage is applied by accident. Note: this fuse is a special 600 V type, always replace with the same type.

14) STATUS OUTPUTS

All the status outputs are logic outputs. Logic "0" means the output is 0 V, logic "1" means the output is 5 V (Ro = 500 Ohm). This makes it possible to drive directly: an opto-coupler, a TTL gate or a CMOS gate.
The Limit Status or **LIM-status** is "1" in case the output voltage or current reaches the limit setting. Which limit circuit is active can be seen on the front panel LED's.

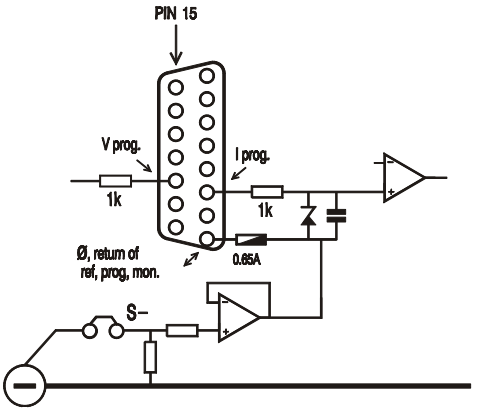

fig. 3 - 4
Programming inputs (internal circuit)

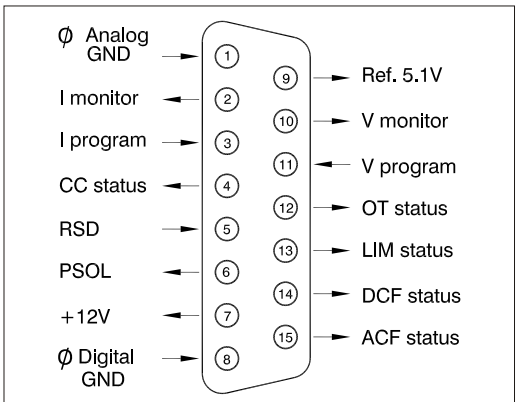

pin	**Description**, see par.12)...17) for details
1	Ø, return of reference, prog. inputs and monitor outputs (Ro = 1.2 Ohm).
2	current monitor output 0 - 5 V (Ro = 1.2 Ohm, Io max = 4 mA)
3	current programming input (0 - 5 V), Ri = 8 MOhm
4	CC status output, logic 1 = CC mode (5 V / 500 Ohm)
5	Remote ShutDown (4 - 12 V), Ri = 5 kOhm
6	PSOL status output, logic 1 = PSOL (5 V / 500 Ohm)
7	+12 V output (Ro = 3 Ohm, Io max = 0.2 A)
8	Ø, return of status outputs, +12 V and remote ShutDown
9	reference voltage 5.1 V (Ro = 1.2 Ohm, Io max = 4 mA)
10	voltage monitor output 0 - 5 V Ro = 1.2 Ohm, Io max = 4 mA)
11	voltage programming input (0 - 5 V) Ri = 8 MOhm
12	OT - status output, logic 1 = OT (5 V / 500 Ohm)
13	LIM - status output, logic 1 = LIM (5 V / 500 Ohm)
14	DCF - status output, logic 1 = DCF (5 V / 500 Ohm)
15	ACF - status output, logic 1 = ACF (5 V / 500 Ohm)

fig. 3 - 5
Connections ANALOG PROG. CONNECTOR

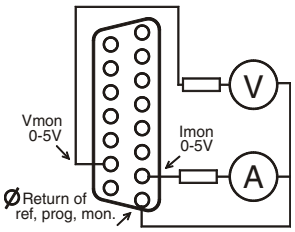

fig. 3 - 6
External meters using monitor outputs

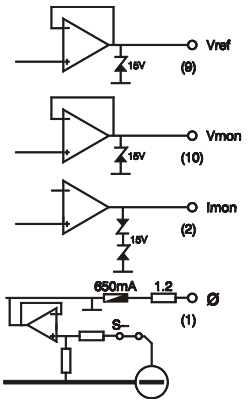

fig. 3 - 7
Buffered monitor outputs (internal circuit)

fig. 3 - 8 Location of output terminals and analog programming connector on the rear panel (standard unit)

CON A	Interlock Connector	*paragraph* 18)
CON B	Master Connector for Master / Slave operation (output)	*paragraph 31)*
CON C	Slave Connector for Master / Slave operation (input)	*paragraph 31)*
CON D	Relay Outputs, contacts 1 - 6 ACF / DCF	*paragraph 15)*
CON E	Analog Programming Connector	*paragraph 9)*
CON F	PSC-ETH, user inputs PSC-232, from PC or previous PSC (optional)	*paragraph 11)*
CON G	PSC-ETH, user outputs PSC-232, to next PSC (optional)	*paragraph 11)*
CON H	PSC-ETH (optional) or PSC-488 (optional) or ISO AMP CARD (optional)	*paragraph 10), 11)*
SW 1	Various settings	*paragraph 16)*
SW 2	Settings for PSC-488 and PSC-232 (optional)	-

fig. 3 - 9 Connectors and switches on the rear panel

The Over Temperature Status or **OT status** is "1" in case of an over temperature, the OT LED will be on and the output shuts down. As a pre-warning the OT LED starts to blink when the unit runs hot but the situation of over temperature is not reached yet. The status will still be low when the LED is blinking.

The Current Control Status or **CC-status** output is "1" when the unit is in CC-mode.

The Power Sink OverLoad Status or **PSOL-status** output is "1" when the optional Power Sink is overloaded or overheated.

The AC-Fail Status or **ACF-status** output is "1" when the input voltage is below 115 V (peak, not rms) for more than 10 ms. Note that if you want the ACF-status to switch before the DCF-status, the hold-up time has to be > 10 ms. This can be achieved by reducing the load, see paragraph 25) of this chapter.

The DC-Fail Status or **DCF-status** output is "1" when the output voltage is either 5% below or above the set point.

When the unit is in CC-mode, DCF will always be "1", see previous paragraph 7).

15) STATUS RELAY OUTPUTS

The power supply has 2 status relay outputs, with each a change-over contact. They are connected to connector CON D. The pins 1, 2, 3 are connected to the DCF-relay and pins 4, 5, 6 to the ACF-relay (see fig. 3 - 10). Pin 1 is the upper output, closest to SW1.

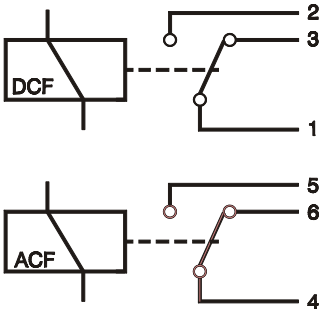

fig. 3 - 10
Status relay outputs on CON D. This situation gives the relay positions during fault condition.

Switch no.	RIGHT position	LEFT position	Default Setting
SW 1 - 1	Programming via 15 pole connector CON E (analog)	Optional programming with e.g. PSC-232, PSC-488, ISO AMP CARD	Right
SW 1 - 2	'Output On' after mains on	'Output Off' after mains on	Left
SW 1 - 3	DCF LED enabled	DCF LED disabled (DCF status and DCF relay are still enabled)	Right
SW 1 - 4	Parallel Master / Slave operation	Series Master / Slave operation	Right

16) FUNCTION SWITCHES ON SW1

In the above table the functions of the DIP switches 1-4 of switch SW1 (rear side) are explained.

17) REMOTE SHUTDOWN (RSD)

A voltage of +4 V...+12 V on the Remote ShutDown input on the programming connector CON E will switch off the output of the unit.

It is also possible to use a relay contact or a switch to shut the unit down (see fig. 3 - 11).
In standby mode the power supply consumes very little power.

18) INTERLOCK

The Interlock connector (CON A, rear panel) has 2 inputs which have to be connected together to turn on the output of the unit.
As soon as the link between the 2 inputs of the Interlock connector is disrupted, the output of the unit shuts down.
It can be used in combination with a cabinet door contact (safety precaution) or as an emergency break to stop a motor which is powered by the unit.

In case the link is disrupted the RSD LED will light. In contrast with Remote ShutDown, also the DCF LED will be on, the DCF status will be high and the relay contact will change.
Once the inputs are connected again, the output will be on.
No voltage may be applied to the pins in the Interlock connector.

19) PROGRAMMING SPEED

The rise and fall time is measured with a step waveform at the CV prog. input. Programming from a low to a high output voltage is nearly load independent, but programming down to a low voltage takes more time on lighter loads. This is caused by the output capacitors, which can only be discharged by the load because the power supply cannot sink current. With the **Power Sink option**, also the programming down speed is nearly load independent.

When having a unit with a **Fast Programming option**, the rise and fall time *is 5 to 25 times faster (see datasheet).* The programming source must be floating or otherwise an ISO AMP CARD must be used, a non-floating source will result in slope distortion.

For a fast programming unit it is generally not recommended to use remote sensing or serial / parallel operation. Consult factory for advice. Note that the output ripple is higher.

20) PULSATING LOAD

To avoid overheating the output capacitors, the AC component of the load current should be limited (see fig. 3 - 12).

One method of decreasing the AC current through the output capacitor is by using a large external electrolytic capacitor in parallel with the load. Care must be taken so that the capacitor in combination with the lead inductance will not form a series resonant circuit!

When using **remote sensing** on a pulsating load (for instance a DC-motor), use a capacitor in series with a resistor over the load (see fig. 3 - 13). Like this the AC-component caused by the pulsating of the load is filtered.

Note: in case of a **pulsating load**, the I monitor voltage will not exactly match the output current. This is mainly caused by the current through the output capacitors. Remote sensing will worsen this effect.

21) INSULATION

For safety the insulation of the separating components (transformers) between input and output is tested at 3750 Vrms during 1 minute. This is tested before assembly.

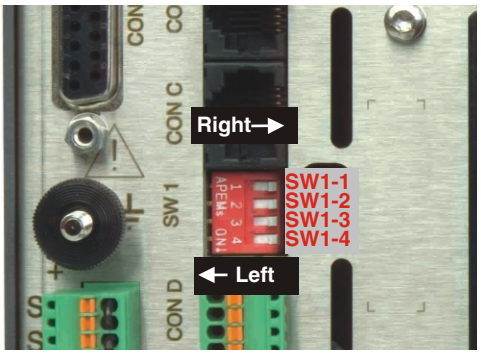

fig. 3 - 10 SW1 Switch positions at rear panel

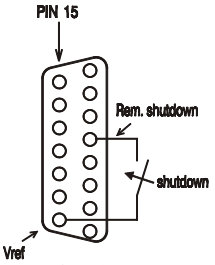

fig. 3 - 11
Remote ShutDown using a relay contact

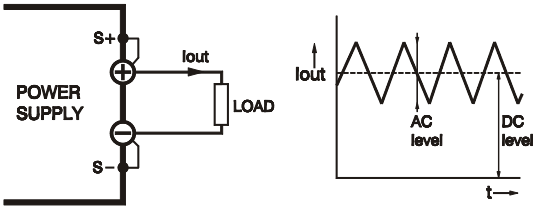

fig. 3 - 12
Pulsating load current

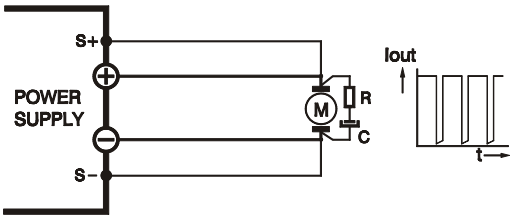

fig. 3 - 13
Remote sensing on a pulsating load

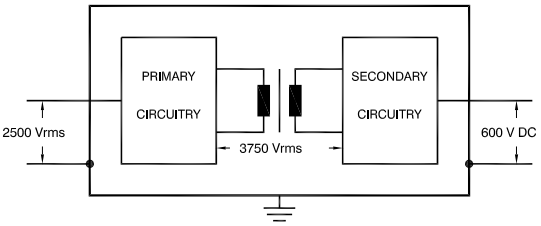

fig. 3 - 14
Insulation test voltages

Warning! The 3750 Vrms cannot be tested afterwards on the assembled unit because the insulation between the components on the input side to the case (like the bridge rectifier) is specified at 2500 Vrms. Since the insulation output - case is low (only 600 V DC) the insulation of the primary components to case will break down when 3750 Vrms is applied between input and output (2500 Vrms + 600 V DC < 3750 Vrms) (see also fig. 3 - 14).
Note: when testing the insulation, take care to charge and discharge the capacitors between input - case and output - case slowly (e.g. in one second). This to prevent high peak currents, which could destroy the power supply. Make sure to discharge the capacitors completely before using it again.

22) RFI SUPPRESSION

Both the input and output have RFI filters, resulting in very low conducted RFI to the line and load. Due to the output filter the output voltage is very clean, having almost no spikes.

23) OPERATING TEMPERATURE

At full power the operating temperature range is –20 to +50 °C. From 50 to 60 °C the output current has to be derated linearly to 75 % at 60 °C (see fig. 3 - 15). These temperatures hold for normal use, i.e. the ventilation openings on the left and right side must be free.

24) THERMAL PROTECTION

A thermal switch shuts down the output in case of insufficient cooling.The OT status will be high. After cooling down the unit will start working again.

The OT-LED on the front panel will be on and the OT-status signal will be "1" in case of a tripped thermal protection.
As a pre-warning the OT-LED blinks (status will still be low), this will start before the power supply shuts down.

25) HOLD - UP TIME

The hold - up time depends on the load and the output voltage.
A lighter load or a lower output voltage results in a longer hold - up time (see fig. 3 - 16).

26) TURN ON DELAY

The output voltage is available about 0.5 s after mains switch on.

27) INRUSH CURRENT

The inrush current is limited with a special circuit.
Repeatedly switching on and off does not change the maximum peak current.
Switching on and off at a fast rate can overheat the inrush current limiter. With the result that the unit does not start anymore. After cooling down (mains switched off) it will be OK again.

28) REMOTE SENSING

The voltage at the load can be kept constant by remote sensing. This feature is not recommended for normal use but only when the load voltage is not allowed to vary a few millivolts. Always use a **shielded cable** for sensing.

In order to compensate for the voltage drop across the load leads, the unit will have to supply a higher voltage, see fig. 3 - 17:
U_{out} = (voltage drop across each lead) + (voltage across the load).

The voltage limit reads the voltage directly at the output terminals. The setting for the limit must therefore be increased by the total voltage drop across the load leads.

The voltage display on the front panel and the voltage monitor output on CON E are connected to the sense leads and therefore read the voltage across the load and **not** the voltage on the output terminals.

The sense leads are protected against **accidental interruption.** The maximum voltage between the output terminals and the sense inputs is limited at 2.5 V.

For sensing on a **pulsating load** see previous paragraph 20).

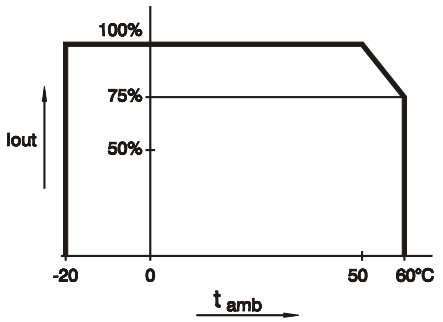

fig. 3 - 15
Operating temperature ranges

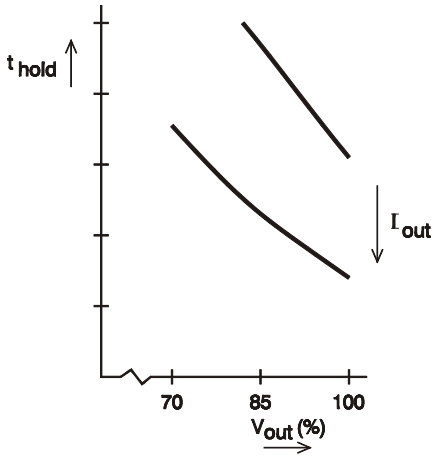

fig. 3 - 16
Hold-up time vs V_{out} with I_{out} as a parameter

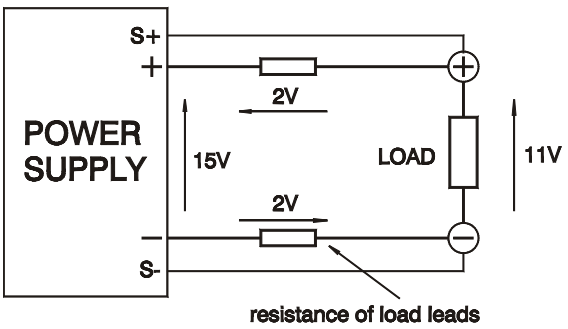

fig. 3 - 17
Remote sensing, voltage drop in load leads sub-

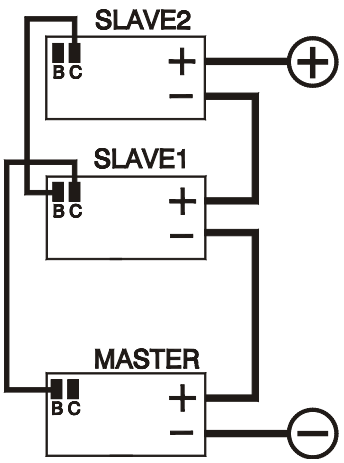

fig. 3 - 18
Master / Slave series operation

29) SERIES OPERATION

Series operation is allowed up to 600 V total voltage. The power supplies can be connected in series without special precautions.

For easier control, Master / Slave operation is recommended (see fig. 3 - 18). By using the Master / Slave Series feature a **dual tracking** power supply can be made with one unit as master and one as slave.

For series operation in combination with **Power Sink** option, all units must have a Power Sink built inside otherwise no power can be absorbed. Refer to Power Sink manual for details and restrictions.

30) PARALLEL OPERATION

Paralleling of the units has no limitations. The power supplies can be connected in parallel without special precautions. For easier control, Master / Slave operation is recommended (see fig. 3 - 19).

Normal parallel operation of **Fast Programming** units can give problems, each combination has to be tested first, in combination with the load !

For parallel operation in combination with **Power Sink** option, only one unit can have a Power Sink. Refer to Power Sink manual for details and restrictions.

31) MASTER / SLAVE OPERATION

The Master / Slave feature makes it possible to use the power supplies as building blocks to form one large unit (see fig. 3 - 18 and fig. 3 - 19).

Mixed parallel - series operation is also possible, to a maximum of 600 V.

The resulting combination of units behaves like one power supply and can be manually controlled or programmed on the master. Fig. 3 - 20 shows a computer controlled M/S parallel combination.

Connect the different units with standard RJ45 cables (see fig. 3 - 21), using CON B and CON C on the rear side. With DIP switch 4 of switch SW1 the Parallel or Series mode can be selected.

The slaves will follow the master. The result is true **current or voltage sharing** in the parallel or series mode respectively.

Note: Master / Slave parallel operation is not recommended for more than 4 units or in combination with Fast Programming option. Consult factory for a solution.

fig. 3 - 21
Use standard UTP cables (RJ45) for Master / Slave operation

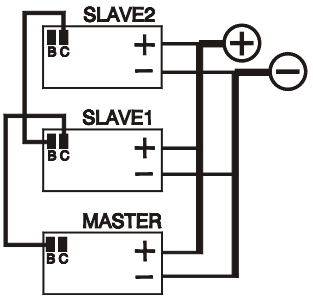

fig. 3 - 19
Master / Slave parallel operation

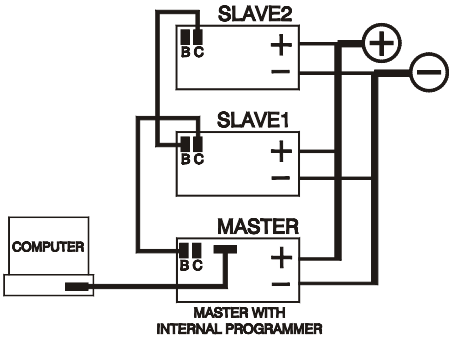

fig. 3 - 20
The Master / Slave combination can also be programmed with the interfaces PSC-ETH, PSC-488 or the PSC-232

32) VOLTAGE AND CURRENT LIMIT

The Voltage and Current Limits maintain the output to a safe preset value. They do not trip, so no resetting is needed after a fault. It can be very handy to have hardware limits when the power supply is programmed.

The limits can easily be set by pressing the DISPLAY LIMITS button and adjusting the limit potentiometers with a screwdriver. The LED's next to the limit potmeters indicate the activity of each limit, also the LIM-status output will be "1".

The Voltage Limit will protect your circuit from unwanted high voltages. A high output voltage could be caused by accidental interruption of leads, accidentally turning up the voltage potmeter, a programming error or a defect in the power supply. The Voltage Limit circuit uses a separate voltage divider connected directly to the output terminals.

The Current Limit protects your circuit from unwanted high currents.
Note: In the Autoranging units the limit circuits are also used as "range limits". This can be confusing. Example: an SM70-AR-24 operating in the range above 35 V will automatically reduce the limit setting to a maximum of 12 A.
Warning: if this unit operates in the range below 35 V, this setting is 24 A ! Take care the output cabling and the load can withstand such a high current or otherwise reduce the limit setting to a lower value.

fig. 3 - 22
Screwdriver adjustment at front panel. Behind the plastic caps, the CV- and CC-settings can be adjusted with a screwdriver.

33) POTENTIOMETERS AND ENCODERS

- Standard: - CV and CC potentiometers with knobs at front panel, Voltage Limit and Current Limit potentiometers with screwdriver adjustment at the front panel.
- Option P001: - Screwdriver adjustment for CV, CC, Voltage Limit and Current Limit at the front panel (fig. 3 - 22).
- Option P236: - Digital encoders for CV and CC setting with a very long life time and intelligent functions (e.g. Keylock). Setting of CV-limit and CC-limit with screwdriver adjustment analog potentiometers at the front panel.

34) COOLING

A low noise blower cools the unit. The speed of the fan depends on the temperature of the internal heatsink. Normally at 50 °C ambient and full load the fan will not work at full speed.

A special feature is that the fan blows through a tunnel where the heatsink is situated, the delicate control circuitry is separated and will not be in the airflow path (see fig. 3 - 23).

Because the air enters at the rear side and exits at the left and right side, it is possible to stack the power supplies, no distance between the units is required. Because only one of the ventilation openings at the left side or right side should be free, it is possible to put two units in parallel in a rack.

For long life the temperature of the air entering on the left side, should be below 35 °C under normal conditions. Under extreme conditions it should be below 50 °C.

Note: The control circuit makes the fan start in a pulsating mode, during which period it can produce a high pitched sound. This is normal.

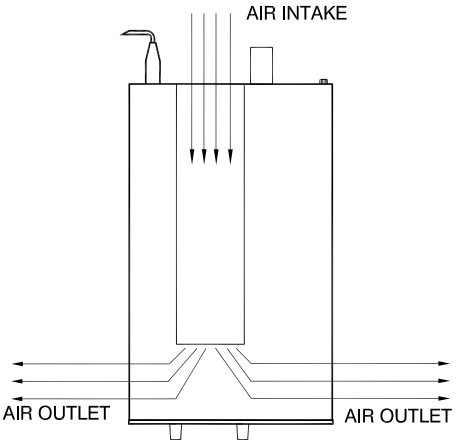

fig. 3 - 23
The fan blows through an internal tunnel, where the heatsink is situated. Always take care to have at least one air outlet unobstructed.

35) DIMENSIONS

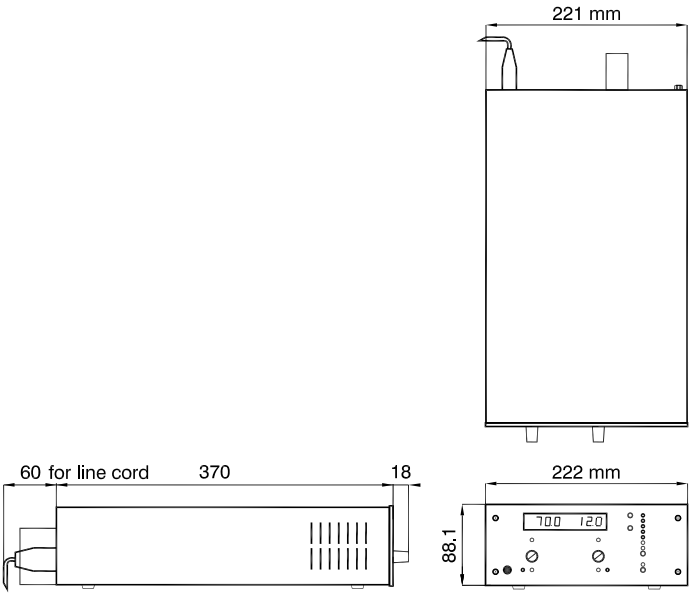

OPERATING MANUAL

1) OPERATING THE UNIT FOR THE FIRST TIME

- Check there is no condensation on the unit. If there is, allow some time to dry.
- Check there is a link between + and S+ and between – and S– on the SENSE BLOCK (on rear panel).
- Check there is a link between the inputs of the Interlock (CON A, rear panel).
- Set the CV and CC potentiometers to minimum (fully anti clockwise). For units with Option P236, this is not needed. These units are set to start at 0 V - 0 A when operated for the first time.
- For recommended cable diameters and torque see table 4 - 1.
- With **high output current** make sure to use low resistive connections between the power supply and the load:
  - *Mount the cable lugs directly on the tinned output strips followed by a washer, a split washer and a nut (see fig. 4 - 1). Always in this order!*
  - *Never place washers between the lugs and the strips because this can result in excessive heat!*
  - *Only use nuts and washers supplied with the unit.*
- Switch on unit.
- Disable the Keylock function, see next paragraph 2).
- Check the unit is not in Remote CV or Remote CC (LED's for this function should be off). Press the REMOTE/LOCAL button until both LED's are off.
- Turn on the output by pressing the OUTPUT ON/OFF button.
- Turn both the CV and CC potentiometer a few turns clockwise. A voltage should now be present on the output.
- By pressing the DISPLAY CV/CC SETTING button, the meters will show the setting of the CV and CC potentiometer.
- By pressing the DISPLAY LIMITS button, the voltmeter will show the setting of the CV-limit and the CC-limit potentiometer.
- Check the cooling of the unit is not obstructed.

2) KEYLOCK

- If the function KEYLOCK is activated, it is no longer possible to operate the REMOTE/LOCAL button and the OUTPUT ON/OFF button. This function can be useful to protect the output from accidental shutdown. The function KEYLOCK does not influence the operating of the CV, CC, CV-limit and CC-limit potentiometers.
- **Units with digital encoders:**
  For units with Option P236 also the digital encoders for CV and CC are disabled with the Keylock function. This means settings of the voltage and current do not change when the encoders are operated. It is still possible to operate the analog CV-limit and CC-limit potentiometers.
- **Activate Keylock:**
  Pressing the buttons DISPLAY SETTINGS and DISPLAY LIMITS at the same time for more than 3 seconds, activates the function KEYLOCK. The moment this function is activated, the LED's for REMOTE CV / CC and for OUTPUT ON will blink a few times.
- **Disable Keylock:**
  Pressing the same buttons again for 3 seconds, disables the Keylock function. The LED's for REMOTE CV / CC and for OUTPUT ON will blink again to indicate the new setting.

3) ANALOG PROGRAMMING

- Set DIP switch 1 of SW1 in position ON to select CON E for programming.
- Disable Keylock.
- Set the unit in REMOTE CV for voltage programming and/or in REMOTE CC for current programming.
  Use the REMOTE/LOCAL button and push this button several times until the right setting is activated.
  Note that pushing the REMOTE/LOCAL button will shutdown the output to avoid accidental damage to the load.

fig. 4 - 1
Low resistive cable connection by mounting the cables directly on the tinned output strips

Unit	Output cables [mm2]	Bolts	Torque [Nm]
SM7.5-80	16	M5	5
SM18-50	10	M5	5
SM70-AR-24	4	M5	5
SM400-AR-4	1	M5	5

table 4 - 1
Recommended cable diameters and mounting torque

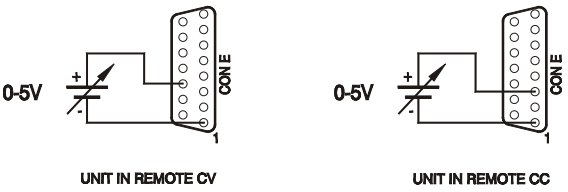

fig. 4 - 2
Programming by voltage:
left voltage -, right current programming

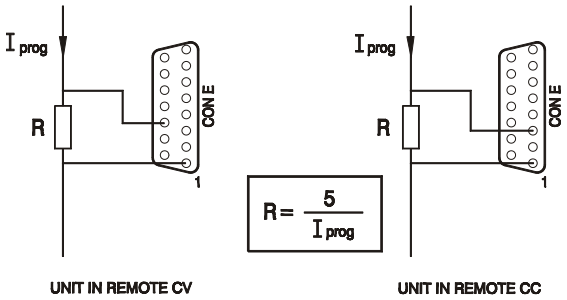

fig. 4 - 3
Programming by current
left voltage -, right current programming

- Connect the programming voltage source(s) (0 - 5 V) to the analog programming connector CON E on the rear panel (see fig. 4 - 2 and fig. 4 - 3). Always use a **shielded cable** (max. 30 meter) for programming.
- Turn the output on again with the OUTPUT ON/OFF button.
- If only the voltage is programmed, the maximum current can still be set with the CC knob on the front panel and vice versa. If this is not desirable the unit can be ordered with Option P001 or Option P236 in order to have a fixed setting for the CV and the CC knob on the front panel, see also par. 33) in previous chapter "Descriptions".
- To avoid hum or noise, the programming cable may have to be twisted in some cases.
- To program the unit by current instead of voltage, simply use a parallel resistor as a current to voltage converter.
- Pressing the DISPLAY SETTINGS button will show the programmed values for CV and CC.
- **CAUTION**: The analog inputs are not isolated from the output. The Ø of the prog. input (pin 1) is internally connected to the S–, the S– is connected to the negative output. To protect the internal wiring a 650 mA self-resetting fuse is connected in series (F27_1 on P647). To avoid earth loops, use an isolated programming source. If this is not possible see next paragraph 4), for using the optional **ISO AMP CARD.**

4) ANALOG PROGRAMMING WITH ISO AMP CARD

- For programming via the **ISO AMP CARD**, set DIP switch 1 on SW1 in the position OFF.
- When the ISO AMP CARD is built inside the unit, CON E has been covered. Use CON H instead. The pinning of CON H is equal to the pinning of CON E.
- For further operating instructions, see previous paragraph 3).

5) Ethernet / IEEE488 / RS232 PROGRAMMING

- Set DIP switch 1 on SW1 in position OFF for programming with the **PSC-ETH**, the **PSC-488** or the **PSC-232**.
  With DIP switch 1 in this position, the signals Vprog (pin 11) and Iprog (pin 3) are disabled on CON E. All the other signals can still be used. For Ethernet programming CON H must be used, CON F and G can be used for the user in- and outputs.
  For IEEE488 also CON H must be used for programming.
  For RS232 programming CON F and G must be used.
- Set the unit in REMOTE CV for voltage programming and/or in REMOTE CC for current programming using the SCPI commands (see manual PSC) or using the REMOTE/LOCAL button on the unit. Push this button several times until the right setting is activated. Setting the unit in REMOTE or LOCAL will cause the output to shutdown to avoid accidental damage to the load. Turn it on again using the SCPI command or with the OUTPUT ON/OFF button.
- Set DIP switch 1 on SW1 in position ON to enable CON E again for analog programming.
  In this position voltage and current programming on CON F and H is disabled. The other functions and signals can still be programmed and read back.

6) MONITORING OUTPUTS

- The 5 V level is compatible with most interfaces.
- The monitoring outputs can drive a meter directly, fig. 4 - 4.

7) STATUS OUTPUTS

- The status outputs have a separate Ø connection (pin 8) to avoid unwanted offsets in the programming. This pin is protected with a 650 mA self resetting fuse (F27_2 on P647).

8) REMOTE SENSING

- Remove the links on the SENSE BLOCK (on rear panel) and connect sense leads (thin **shielded** measuring wires) to S+ and S– (see fig. 4 - 5 and fig. 4 - 6).
- With remote sensing the voltage on the load can be kept constant. The voltage drop in the load leads will be compensated.

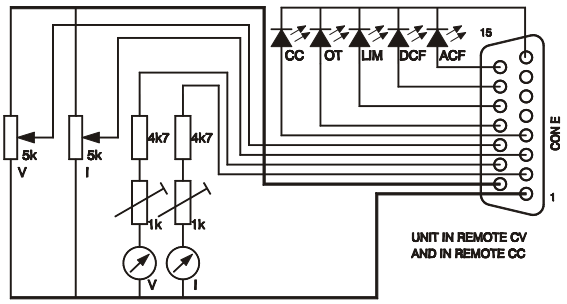

fig. 4 - 4
Remote control

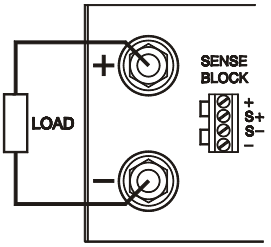

fig. 4 - 5
Local sensing

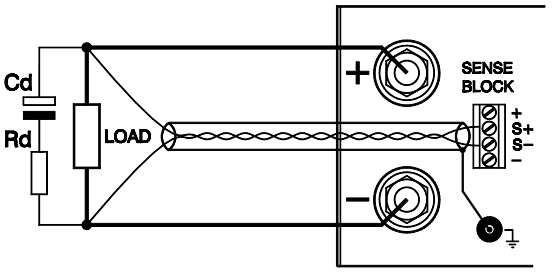

fig. 4 - 6
Remote sensing with shielded wires

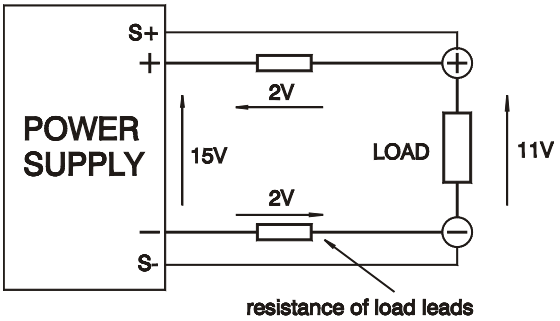

fig. 4 - 7
Remote sensing, voltage drop in load leads subtracts from max. output

This feature is not recommended for normal use, because it can easily give problems.

- Max. 2 V per load lead can be compensated. Note that the voltage drop in the leads decreases the max. output voltage rating. In fig. 4 - 7 it can be seen that on a 15 V power supply only 11 V will be available on the load when 2x 2 V compensation is used.
- In order to prevent interference, it is advisable to twist the sense leads. To minimize the inductance in the load leads keep the leads close to each other. The inductance of the loads leads could give a problem with pulsating loads. In this case a large electrolytic capacitor (Cd) in series with a damping resistor (Rd) both in parallel with the load will help (see fig. 4 - 6). Check that the capacitor Cd in combination with the load leads and resistor Rd forms a well damped circuit.
- Since the **voltmeter** is internally connected to the sensing terminals, it will automatically indicate the **voltage on the load**. Note that the voltage measured on the load will be lower than on the output terminals.
- The Over Voltage Limit measures the voltage on the output terminals, so the OVL setting should be increased by the total voltage drop in the load leads.

9) BATTERY CHARGER

- The CV / CC regulated power supplies are ideal battery chargers. Once the output is set at the correct voltage the battery will charge constantly without overcharging.
  This can be useful for emergency power systems.
- **Protective measures**
  Use a CIRCUIT-BREAKER in series in order to protect the power supply from **accidental reverse connection** (see fig. 4 - 8). The circuit-breaker should have a DC voltage rating twice the battery voltage. Use the very fast type (Z), a type meant for protecting semiconductors (see table 4 - 2). The unit has a reverse diode in parallel with the output, this diode and the wiring cannot withstand the thousands of amperes supplied by a wrongly connected battery.

10) REMOTE SHUTDOWN

- The Remote Shutdown can be operated on CON E by a voltage of +4 V...+12 V or by a relay contact between Vref and Remote ShutDown (pin 9 and 5) (see fig. 4 - 9).
- When the unit is programmed with an optional PSC, a software command can be used for Remote Shutdown.
- In the Remote Shutdown condition, the RSD LED will light. The DCF LED, DCF status and the DCF relay will be off.

Important: If the link from the Interlock connector (CON A) has been removed, the RSD LED will be on, but in this condition also the DCF LED, the DCF status and the DCF relay will be on.

11) MASTER / SLAVE SERIES OPERATION

- Connect output terminals and test system in **normal series** operation. Ensure that all (output) power connections are reliable.
- The voltage drop in the connecting leads between the units should be kept < 10 mV.
- Switch off all units. Connect units as shown in fig. 4 - 10. To connect the slaves with the master via CON B and CON C, use standard UTP cables (RJ45).
  On all units put DIP switch 4 of SW1 in position OFF to set the units in M/S series mode.
- After turning the units on again, the slaves will be in Remote CV mode and the Keylock, see previous paragraph 2) is activated. This is because the unit automatically detects the presence of the RJ45 connector in CON C (if this cable is connected to another unit).
  If the RJ45 connector is removed from CON C when the unit is turned on, the output will shutdown to avoid accidental damage.

Suggested Circuit Breakers for protection power supply			
Model	Type number Circuit Breaker	Brand	Remarks
SM7.5-80	S281 UC-B 100	ABB	-
SM18-50	S281 UC-Z 63	ABB	-
SM70-AR-24	S281 UC-Z 25	ABB	-
SM400-AR-4	S281 UC-Z 6	ABB	extra parallel diode on output needed. 2x BYT261in series

table 4 - 2
Circuit breakers for protection.

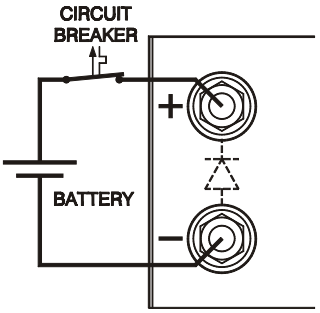

fig. 4 - 8
Charging battery with a circuit-breaker in series

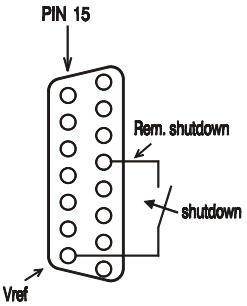

fig. 4 - 9
Remote shutdown with switch

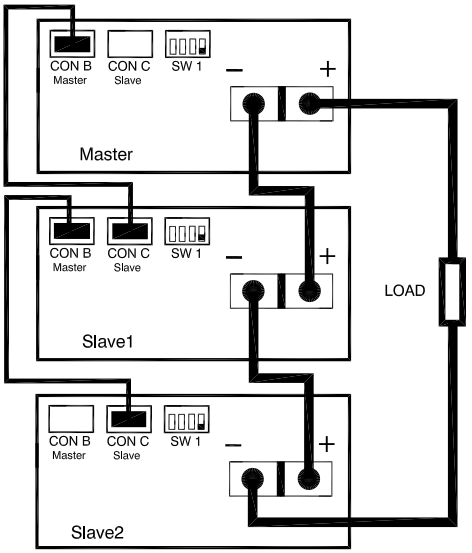

fig. 4 - 10
Master / Slave series connection

If the cable is inserted when the unit is turned on, the output shuts down, the unit changes to Remote CV / CC, the Keylock will be activated and the output will turn back on.
If DIP switch 4 of SW1 is operated when the unit is turned on, the output will shutdown to avoid accidental damage.

- The max. number of slaves is only limited by the max. total voltage of 600 V.

12) MASTER / SLAVE PARALLEL OPERATION

- **Note: Master / Slave parallel is not recommended for more than 4 units, consult factory for using more than 4 power supplies in parallel.**
- First, connect output terminals and test system in **normal parallel** operation. Ensure that all power connections are reliable.
- Second, switch off all units. To connect the slaves with the master via CON B and CON C, use standard RJ45 connectors according to fig. 4 - 11.
  On all units put DIP switch 4 of SW1 in position ON to set the units in M/S parallel mode. In this mode the DCF LED, DCF relay and DCF status on the slaves are disabled because the slaves are always in CC mode.
- After turning the units on again, the slaves will be in Remote CC mode and the Keylock, see previous paragraph 2) is activated. This is because the unit automatically detects the presence of the RJ45 connector in CON C (if this cable is connected to another unit).
  If the RJ45 connector is removed from CON C when the unit is turned on, the output will shutdown to avoid accidental damage.
  If the cable is inserted when the unit is turned on, the output shuts down, the unit changes to Remote CV / CC, the Keylock will be activated and the output will turn back on.
  If DIP switch 4 of SW1 is operated when the unit is turned on, the output will shutdown to avoid accidental damage.
- Stack the units to create a minimum distance between the units. Keep the load close to the master.
  Use copper strips (preferred) or short thick cables to connect the units. Make sure the strips are mounted with a minimum length to keep the voltage drop between a unit and the bus bar below 10 mV. Also keep the strips close to each other to have a low inductance. Not following these instructions can cause instability.
- The S- and S+ could be connected to the load if desired, but this is not recommended because of the complexity and possible instability.

13) PARALLEL OPERATION OF FAST PROGRAMMING VERSIONS:

- Master / Slave operation is not recommended.
- Normal parallel operation can give problems, each combination has to be tested first in combination with the load.

14) MASTER / SLAVE MIXED SERIES / PARALLEL OPERATION

- For complex combinations as mixed series - parallel, always use a **MASTER / SLAVE SERIES ADAPTER**.
- See fig. 4 - 12 for an example of how to connect 2 units in series in parallel with 2 units in series, controlled by 1 master.
- Set the programming mode with the knob Remote / Local on the front panel. The serial slaves must be in Remote CV- and CC-mode. The parallel slave must be in Remote CC-mode and the CV-potmeter must be fully opened.
- Note: A Master / Slave combination can always be programmed, also with the **IEEE488 / RS232** controller (**PSC-448 / PSC-232 (both δ-products)**).

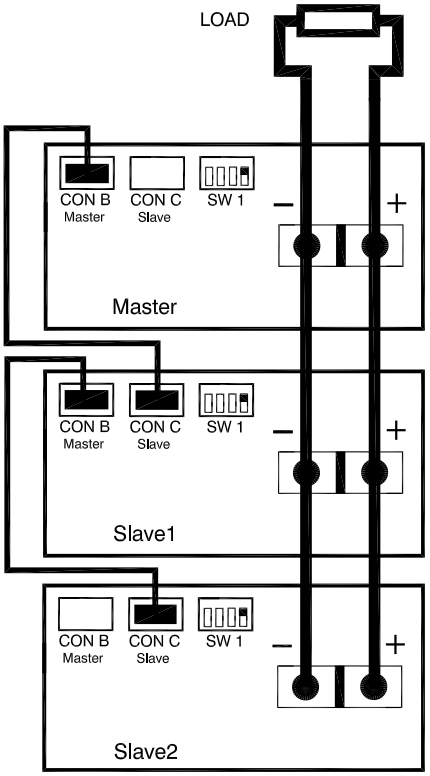

fig. 4 - 11
Master / Slave parallel connections

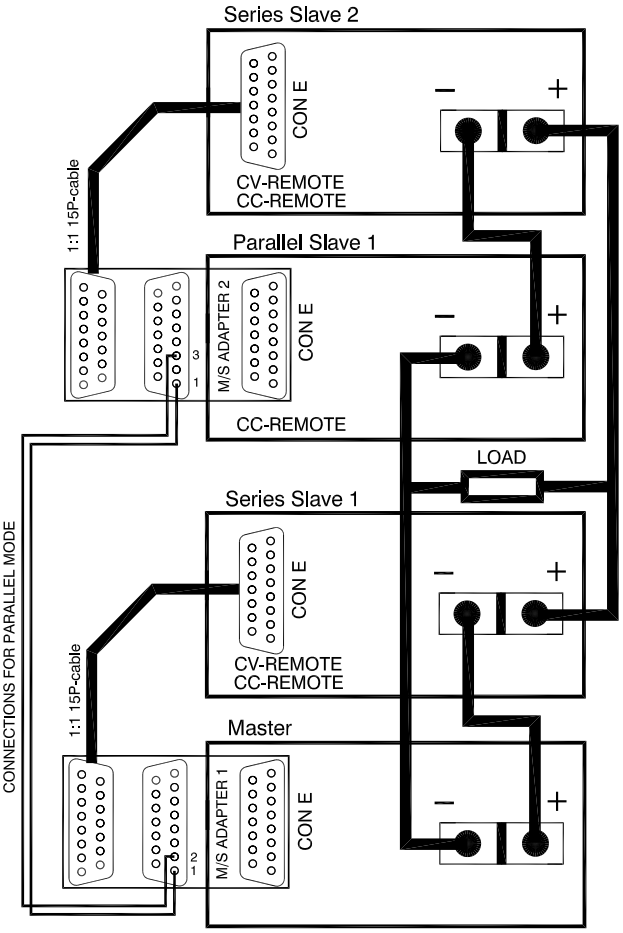

fig. 4 - 12
Master / Slave mixed series - parallel connections

OPERATING AND STORAGE CONDITIONS

1) TEMPERATURE

- The operating temperature range at full load is –20 to +50 °C. But this temperature range only holds when the AIR-INTAKE and at least one of the AIR-OUTLETS is unobstructed and the temperature of the AIR-INTAKE is not higher than +50 °C.
- **Please note: a lower temperature extends the life of the power supply.**
- When the power supply is **mounted in a cabinet** please note that the temperature of the AIR-INTAKE should be kept low and avoid a short circuit in the airflow i.e. the hot air leaving the AIR-OUTLET entering the AIR-INTAKE again.
- The storage temperature range is –40 to +85 °C.

2) HUMIDITY

- During normal operation humidity will not harm the power supply, provided the air is not aggressive. The heat normally produced in the power supply will keep it dry.
- **Condensation.**
  Avoid condensation inside the power supply, break-down could be the result.
  Condensation can occur during a period the power supply is switched off (or operating at no load) and the ambient temperature is increasing .
  Always allow the power supply to dry before switching it on again.

3) GALVANIC INDUSTRY

- For using the power supplies in the galvanic industry it is strongly recommended to take precautions against an aggressive environment.
- An aggressive environment with acid, salt, etc. can harm the electronic components. Sometimes even the copper tracks on the printed circuit boards dissolve.
- To avoid problems, the power supplies should be mounted in a relatively clean room, or mounted in a cabinet receiving clean air with over pressure, or in a cabinet with a heat exchanger.

MAINTENANCE

1) GENERAL

- The SM-series power supplies normally need no maintenance or calibration. Only care must be taken that the cooling of the unit is not obstructed.

2) COOLING FAN

- The built up of dust on the impeller of the fan and the heat sink fins depends on the environment. Since the fan has over-capacity, dust will not present a problem very quickly.
- The internal construction of the power supply is such that no dust will reach the sensitive control circuitry, only the heat sink in a tunnel will be cooled by forced air (see fig. 4 - 13).
- The thermal protection will shutdown the output in case of overheating, so the power supply will not be damaged.
- It is advisable to inspect the fan and the heat sink regularly.

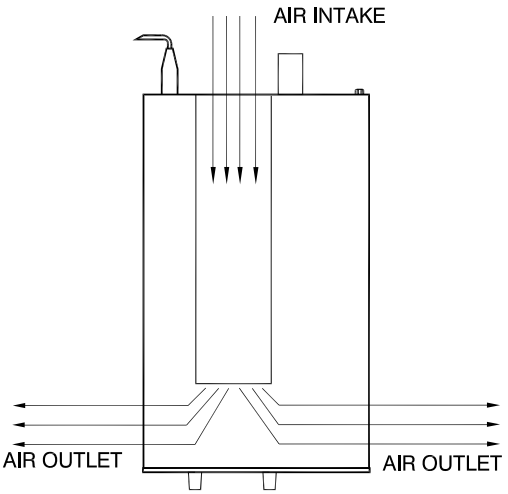

fig. 4 - 13
The fan blows through an internal tunnel, where the heatsink is situated.
Always take care to have at least one air outlet unobstructed.

TROUBLE SHOOTING

1) GENERAL

- In case you need assistance for repairing a unit, please contact our engineers using the address "Support@Delta-Elektronika.nl".
- In case you want us to repair the unit, please first fill out the RMA-form before sending the unit to us. Adding a detailed fault description will help us to repair the unit as soon as possible.
  On our website *www.DeltaPowerSupplies.com* the RMA-form can be found under 'Support'.

2) NO OUTPUT (manual control)

- Check the LEDs 'Remote CV' and 'Remote CC' on the front panel, they should be off. Disable Keylock and press the REMOTE/LOCAL button to turn both LEDs off.
- The LED 'Output On' should be on. If this LED is off, disable Keylock and push the button 'OUTPUT ON/OFF'.
- Check the connections on the SENSE BLOCK (at rear panel), there should be a link between + and S+ and between – and S– (see fig. 4 - 16).
- Check if there is a link in the Interlock connector (if not, the RSD LED will be on).
- Set both the CV- and CC-limit potentiometer (at front panel) at maximum (fully clockwise).
- Turn both the CV and CC potentiometers a few turns clockwise.
  A voltage should be present on the output (for units with Option P236 first remove the Keylock function before the CV and CC knobs can be turned, see par. 2) in previous chapter "operating manual").
- Disconnect the cables from the output and check if now there's a voltage present on the output. If this is the situation, use a load with a higher impedance or use a second power supply in parallel.

3) PROGRAMMING DOES NOT WORK OK

- Check the unit is in Remote mode (Remote CV and/or Remote CC LED should be on).
- **The unit works OK in manual control,** but in programming mode the output voltage / current has a large error.
  Probably the fuse in series with Ø (pin 1) of programming connector tripped, the fuse (F27_1 = 650 mA) is a self-resetting type (see fig. 4 - 14).
- To check the fuse (F27_1) measure the voltage between Ø and the minus output, during the fault condition. The voltage should only be a few mV, a high voltage means that an unwanted current is flowing through pin 1 of the prog. connector.
  Please check why current is flowing through pin 1 (see next paragraph 4) and fig. 4 - 15).

4) PROGRAMMING OFFSETS

- **Unwanted offsets in the programming can be caused by earth loops.**
  Fig. 4 - 15 shows a typical earthing problem. In case the load has a connection to earth and the programming source as well, problems could occur. Improper choice of the earthing point of the load can give a voltage drop of ΔV1. Connecting the minus or zero to a separate earth connection can give a voltage drop of ΔV2. Because the internal wires of the programming input are thin, the voltage drops ΔV1 and ΔV2 will be across the internal wiring as well. Resulting in an error voltage in series with the programming voltage.
- The best **solution** for this is to use a floating programming source, a floating load or the optional internal **ISO AMP CARD (δ-product)**.

5) STATUS OUTPUTS FAIL

- Check fuse F27_2 in series with Ø (pin 8 of CON E) (see fig. 4 - 14). To check the fuse measure the voltage between Ø and the minus output, a high voltage means too much current flowing through the fuse. F27_2 = 650 mA, self resetting.

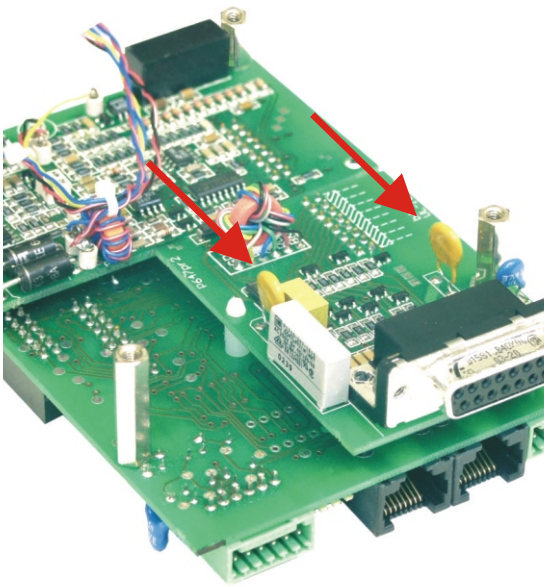

fig. 4 - 14
Location of programming fuses on P647
P647 is situated directly behind the rear panel

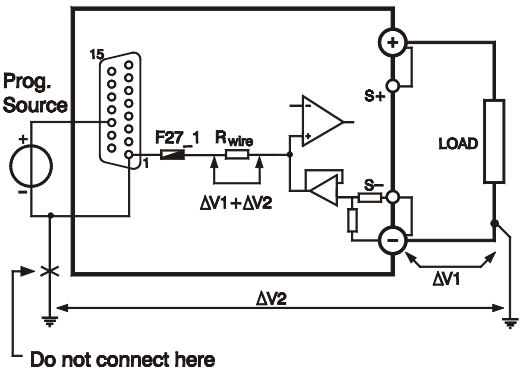

fig. 4 - 15
Unwanted programming offsets

6) MASTER / SLAVE PARALLEL PROBLEMS

- Check the voltage drop of the wiring between the master and the slaves is < 10 mV.
- Check the wiring has a low inductance.

7) OUTPUT VOLTAGE IS HIGHER THAN SET VALUE

- Check connections on SENSE BLOCK (on rear panel), For normal operation there should be a link between + and S+ and between – and S– (see also fig. 4 - 16). When remote sensing is used, check the wires of the sensing.

8) OT LED on

- The temperature of the internal heat sink is too high, the output has been shutdown to avoid overheating.
- Check if the cooling fan is running.
- Check if the air temperature of the air inlet (left) is below 50 °C and the airflow is not obstructed.

9) OT LED blinks

- The temperature of the internal heat sink is getting too high, a further increase will shutdown the power supply.
- Check if the cooling fan is running properly.
- Check if the air temperature of the air inlets (left) is below 50 °C and the airflow is not obstructed.

10) ACF LED on

- The input voltage is too low or was intermittent because of a bad connection. Disconnect the mains, wait a few minutes and try again.
  As soon as the ACF LED lights, the settings for Remote CV, Remote CC and Keylock will be saved. If the unit turns back on, it will have the same settings. For the setting of Output On/Off after turning the unit back on, the position of DIP switch 2 on SW1 is determining.
  If the ACF situation lasts a few seconds, the output will shutdown. The ACF problem has to be solved first, before the output can be turned on again.
- Internal error, send unit for repair. See previous paragraph 1) .

11) DCF LED on

- The output voltage is below the set voltage. This automatically happens when the unit is in CC-mode (CC LED is on).
  Also with an interrupted Interlock connector, the DCF LED will be on.
- Internal error, send unit for repair. See previous paragraph 1).

12) PSOL LED on

- The Power Sink is in overload or the temperature of the Power Sink is too high. See datasheet of the Power Sink option for further details.

13) NO LEDS on

- Check input.
- Do not try to repair, but send for repair. See previous paragraph 1).

14) Blinking LEDs REMOTE CV, REMOTE CC and OUTPUT ON

- This indicates the Keylock function is activated, see previous paragraph 2) in "operating manual".

15) OTHER

- If the problem persists, please fill out the RMA-form on our website *www.DeltaPowerSupplies.com*. See previous paragraph 1).

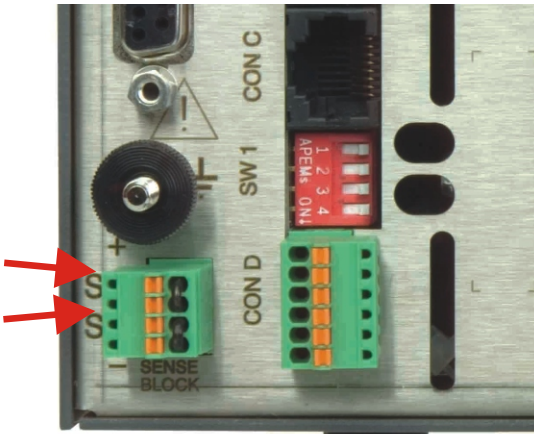

fig. 4 - 16
For normal operation links should be connected between S+ and + and between S– and –

CALIBRATION

1) GENERAL

- The power supplies are factory calibrated and normally need no further calibration. Only in special situations (for example after repairing a unit) calibration can be necessary.

2) METER CALIBRATION

- DIGITAL METERS
  The full scale indication can be calibrated with R25_31 and R25_36 on P673 (fig. 4 - 17).

3) SPECIAL CALIBRATIONS

- The following calibrations must be done by qualified personnel only. Wrong calibration causes malfunction. These calibrations are only needed after special repairs.
  Warning ! Damage caused by a wrong calibration is not warranted.
- CALIBRATING THE CURRENT MONITOR OFFSET.
  With R26_73 on P650 the offset of the CC monitor voltage can be calibrated (see fig. 4 - 18). The unit has to be unloaded, the output voltage has to be turned off using the OUTPUT ON/OFF button. Measure the offset voltage of the CC monitor on the programming connector. Calibrate the offset on a negative value between –1 mV and zero mV.
  Warning! wrong calibration can damage the unit.
- CALIBRATING MAX. CURRENT RANGE or CALIBRATING CC MONITOR FULL SCALE.
  Short the output using a low resistive cable. Measure the output current with an accurate shunt. The maximum output current can be calibrated with R26_41. R26_41 is located on P650 (see fig. 4 - 18).

  Program CC input with exactly 5.00 V.
  Set output voltage to a high value, ensuring the power supply is in CC mode. Calibrate the current with R26_41 exactly on the rated max. current.
  Warning! Wrong calibration can damage the unit.

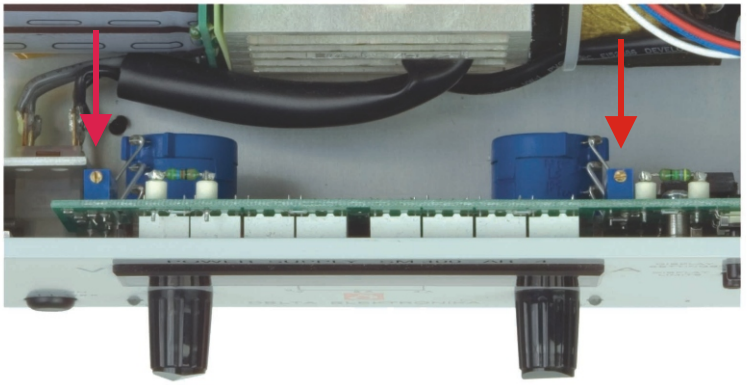

fig. 4 - 17
Meter calibration with 25-turn potmeters on P673

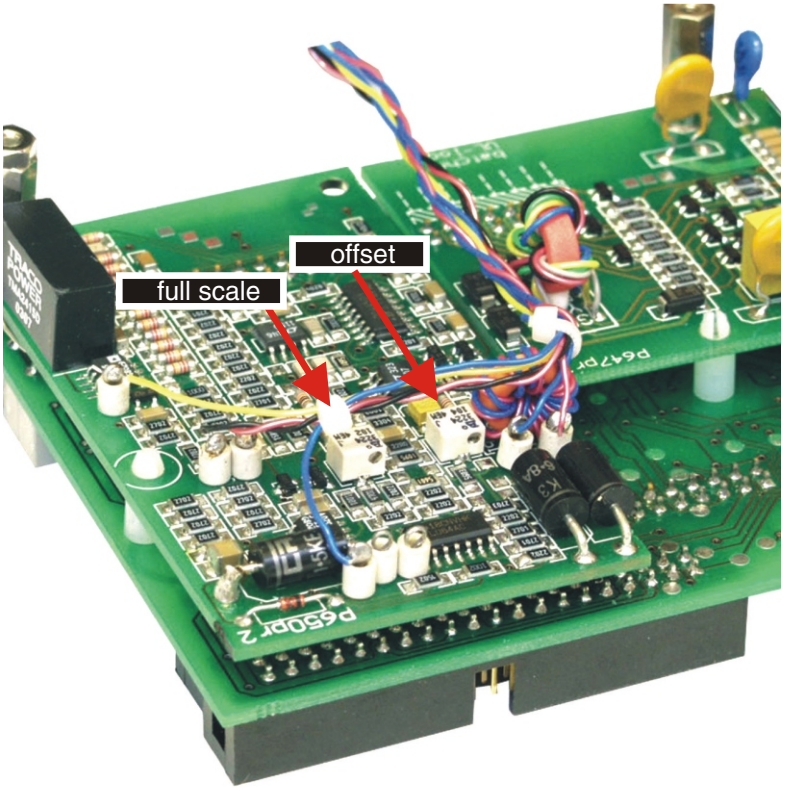

fig. 4 - 18
Calibrating max. current and offset on P650

Vissersdijk 4
4301 ND Zierikzee
The Netherlands

Tel. +31 111 413656
Fax. +31 111 416919
www.deltapowersupplies.com

DELTA ELEKTRONIKA B.V.

EC Declaration of Conformity

We

Delta Elektronika
Vissersdijk 4
4301 ND ZIERIKZEE
The Netherlands

Declare under sole responsibility that the following Power Supplies:

SM 7.5-80
SM 18-50
SM 70-AR-24
SM 400-AR-4

Meet the intent of Directives 2014/30/EC for Electromagnetic Compatibility and Directives 2014/35/EC regarding Electrical Safety. (Low Voltage Directive) Compliance was demonstrated to the following specification as listed in the official Journal of the European Communities:

EN 61000-6-3 Generic Emissions: (residential, light industrial)

EN 55022 Radiated and conducted, Class **B**
EN 61000-3-2 Power Harmonics
EN 61000-3-3 Voltage fluctuation and flicker

EN 61000-6-2 Generic Immunity: (industrial environment)

EN 61000-4-2 Electrostatic Discharge
EN 61000-4-3 Radiated electromagnetic fields
EN 61000-4-4 Electrical Fast Transients / Bursts
EN 61000-4-5 Surge on DC output
EN 61000-4-5 Surge on line input
EN 61000-4-6 RF common mode, conducted
EN 61000-4-11 Voltage variations and dips

EN 60950 Safety of IT equipment

EN 61010 Safety of electrical equipment for measurement, control and laboratory use

Managing director,
Zierikzee, March 2017